- Port size: Ø 6 ... 12 mm G1/8 ... G3/8
- Configuration flexibility
- Low weight
- No tools required for assembly

Technical features

Medium:
Compressed air
Maximum operating pressure:
12 bar (174 psi)

Flow:
Startpoint 0,55 dm³/s at 6,3 bar (91.3 psi) inlet pressure
More Information - see below
Nominal bowl capacity:
52 ml

Ambient/Media temperature:
-20 ... +52°C (-4 ... +125°F)
Air supply must be dry enough to avoid ice formation at temperatures below +2°C (+35°F).

Materials:
Body: PBT
Transparent bowl: PC
Sight-feed dome: Transparent PA
Internal parts: Acetal
Elastomers:
Bowl O-ring - CR
All others - NBR

Technical data - standard models

Symbol	Port size	Connector	Flow (dm³/s) *1)	Weight (kg)	Model
	G 1/4	With mounting bracket	24 (1440 l/min)	0,19	L92C-2GP-ETN

*1) Typical flow with 6,3 bar inlet pressure and a 0,5 bar drop from set.

Option selector

L92C-★★P-ETN

Connector with mounting bracket	Substitute
6 mm Push-in fitting	6D
8 mm Push-in fitting	8D
10 mm Push-in fitting	AD
12 mm Push-in fitting	BD
G 1/8	1G
G 1/4	2G
G 3/8	3G

Connector without mounting bracket	Substitute
G1/4	2V
Connector	**Substitute**
Without	NN

Flow characteristics

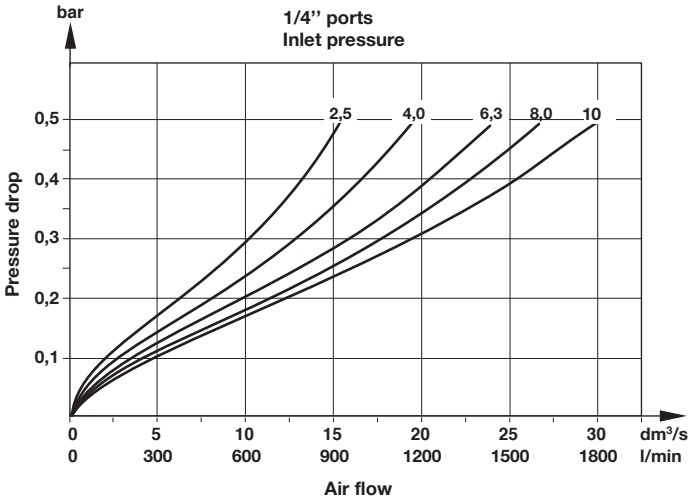

Component parts and accessories

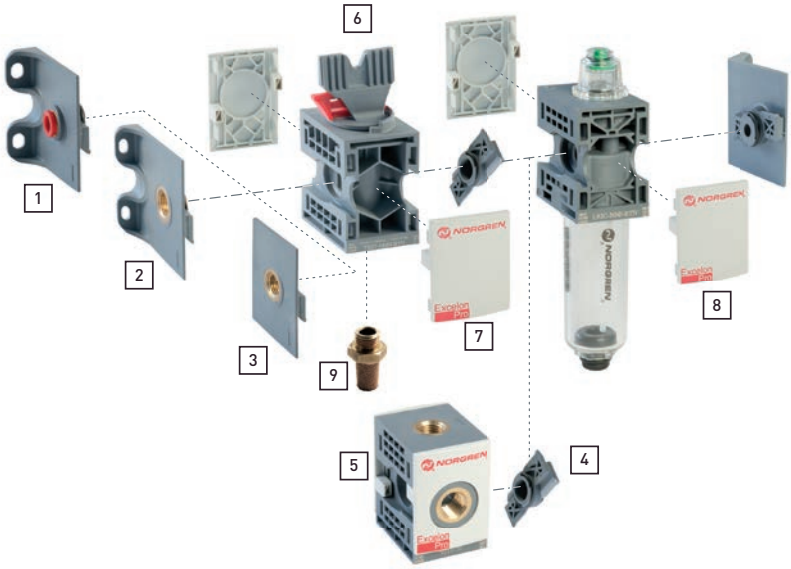

Port size	Push-in fitting connector with mounting bracket 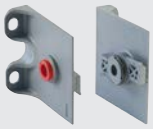 1	Threaded connector with mounting bracket  2	Threaded connector without mounting bracket 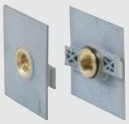 3
G1/8	-	9212KIT-1G	-
G1/4	-	9212KIT-2G	9211KIT-2V
G3/8	-	9212KIT-3G	-
ø 6 mm	9213KIT-6D	-	-
ø 8 mm	9213KIT-8D	-	-
ø 10 mm	9213KIT-AD	-	-
ø 12 mm	9213KIT-BD	-	-

Quick connector	Porting block Plugs not included	Lockout/shut-off valve with exhaust port	Locking plate	Silencer
 4	 5	 6	 7	 9
9210-50	9216-51	T92T-NNN-B1N	9236-88	T40M0500

Warning
Locking plates MUST be in place
before pressurizing any Excelon Pro unit.

Service kit

Lubricator service kit	Closed bowl bowl set
	
L92C-KIT	9225KIT-52

Drawings

Lubricator with wall mounting bracket

Dimensions in mm
Projection/First angle

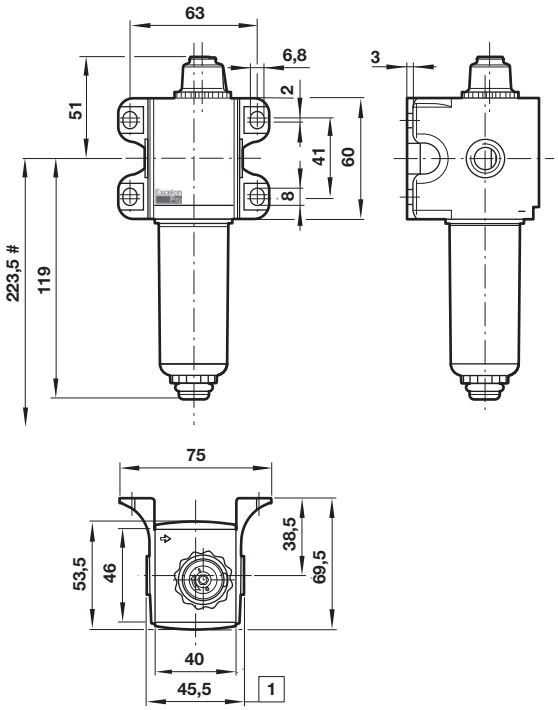

Minimum clearance required to remove bowl

1 **Connector Dimensions**
1/8" and 1/4" threaded connectors shown. See below for port-to-port dimensions for additional connectors.

PIF Connector	**Port-to-port**
6 mm, 8 mm	60
10 mm, 12 mm	62
Threaded connector	
G1/8, G1/4	45,5
G3/8	76

Lubricator without mounting bracket, G 1/4 port size

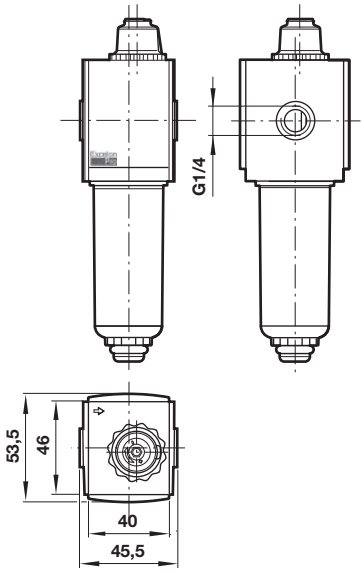

Porting block

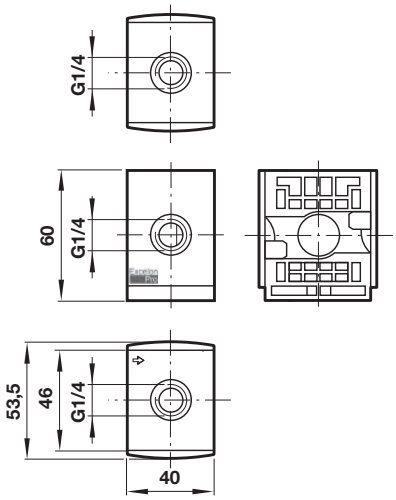

Lockable/shut off valve

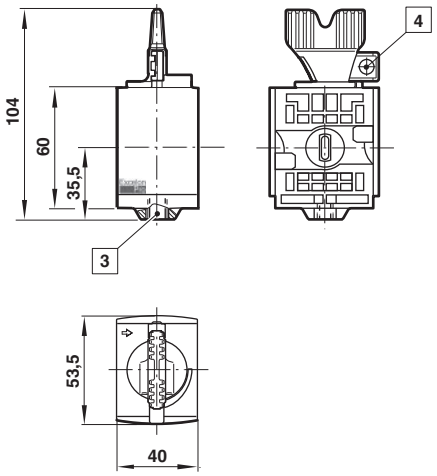

3 M5 exhaust port
4 Lever lockable only in closed position.
Lock slide accepts ø 7 mm padlock/shackle.

Warning

These products are intended for use in industrial compressed air systems only. Do not use these products where pressures and temperatures can exceed those listed under **»Technical features/data«**.
Before using these products with fluids other than those specified, for non-industrial applications, life-support systems or other applications not within published specifications, consult IMI Precision Engineering, Norgren Inc.
Through misuse, age, or malfunction, components used in fluid power systems can fail in various modes.

The system designer is warned to consider the failure modes of all component parts used in fluid power systems and to provide adequate safeguards to prevent personal injury or damage to equipment in the event of such failure.
System designers must provide a warning to end users in the system instructional manual if protection against a failure mode cannot be adequately provided.
System designers and end users are cautioned to review specific warnings found in instruction sheets packed and shipped with these products.